BUILDING PRODUCT

Stud-Lok

FAST METHOD OF FIXING WALL PLATES TO STUDS

Designed to provide a fast and easy way to connect wall plates to studs, Stud-Lok comes in four sizes to accommodate single or double wall plates.

Stud-Lok is not to be used for Truss Tie Down unless in accordance with certified details provided by MiTek.

For durability information, please refer to **Corrosion Resistance of MiTek Metal Connectors,** available on the MiTek website at **mitek.com.au** and in the EasyCAT App under the Technical Documents section.

ADVANTAGES

- Hybrid Hexagonal and Torx T40 driving socket for easy driving into a wide density of timbers. Driving bits included in every box (SLX)
- Screw length and product identification stamped on head of screws. Screws are color coded for easy inspection and identification on site
- Flat head of screws sits flush with wall plate surface
- Screw head does not interfere with truss tie down fixing to side face of wall top plates
- Ruspert R1000 coating for corrosion resistance
- Screws are fully engineered and tested to Australian Standards with compliance to CodeMark

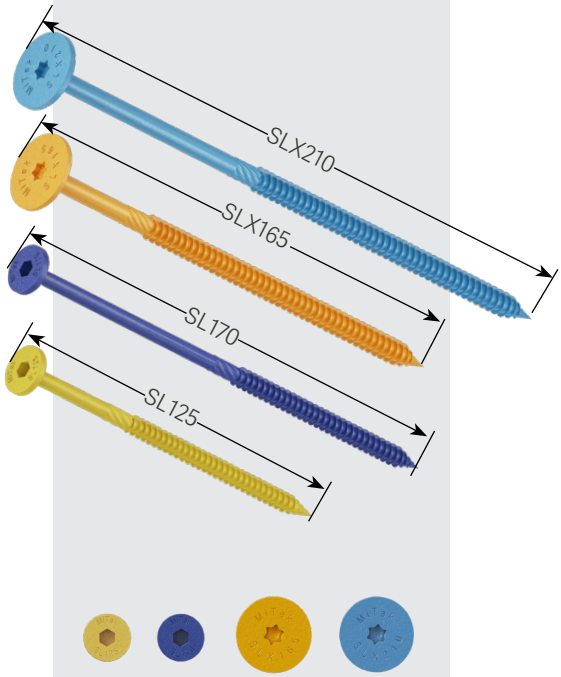

This Certified Engineering Building Product complies with the National Construction Code and Australian Standards.

MITEK.COM.AU

CODEMARK
CM70055
Australia

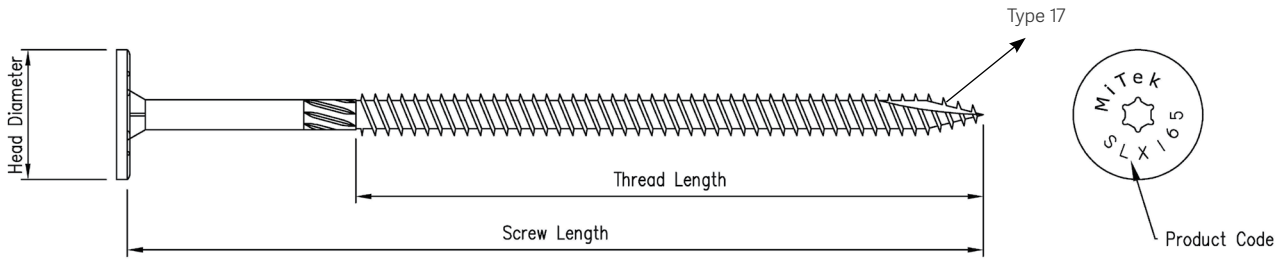

Product Code *	Corrosion Protection **	Head Diameter	Screw Gauge #	Screw Length	Thread Length	Drilling Tip Type
SL125	R1000 Class3	16mm	14g (No.14)	125mm	80mm	Type 17
SL170	R1000 Class3	16mm	14g (No.14)	170mm	80mm	Type 17
SLX165	R1000 Class3	25mm	18g (No.18)	165mm	120mm	Type 17
SLX210	R1000 Class3	25mm	18g (No.18)	210mm	120mm	Type 17

* SL125 and SLX165 are designed to suit single wall plate application. SL170 and SLX210 have higher performance in double wall plate application.
** Speciality Ruspert Coating with Zinc Undercoat and lubricant
# Gauge of screw as nominate in AS 3566.1

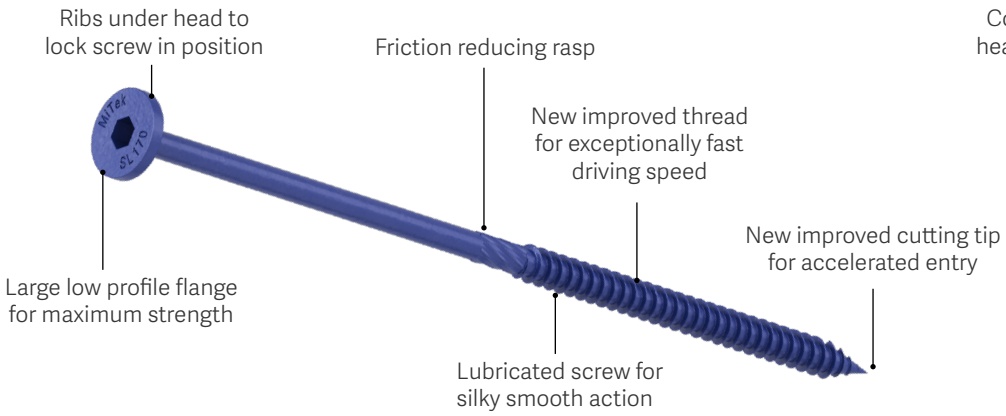

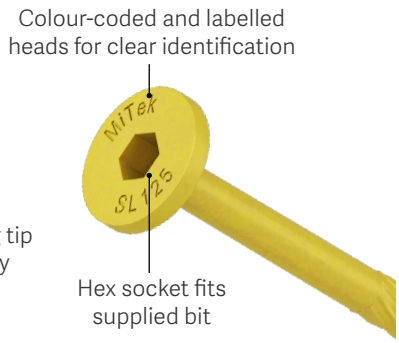

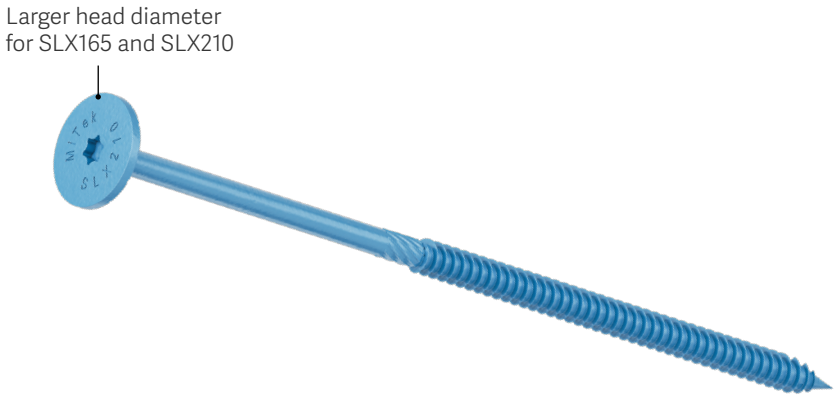

DESIGN CAPACITY FOR FIXING OF TOP PLATE TO WALL STUDS

Table 01

Uplift Capacity of Wall Plates to Stud Fixings*					
Timber Species/ Joint Group	Wall Plate Thickness (mm)	Limit State Design Wind Uplift Capacity (kN) per Stud-Lok			
		SL125	SL170	SLX165	SLX210
Australian & New Zealand grown pine / JD4	35	7.13	7.13	10.30	-
	45	7.13	7.13	10.30	-
	70	4.90	7.13	9.58	12.10
	80	4.02	7.13	8.57	12.10
	90	3.12	7.13	7.56	12.10
Australian & New Zealand grown pine / JD5	35	5.74	5.74	9.10	-
	45	5.74	5.74	9.10	-
	70	3.95	5.74	7.20	9.10
	80	3.23	5.74	6.45	9.10
	90	2.52	5.74	5.69	9.10
Imported White Baltic Pine & European Spruce / JD6	35	4.27	4.27	6.50	-
	45	4.27	4.27	6.50	-
	70	2.94	4.27	6.50	8.50
	80	2.40	4.27	6.02	8.50
	90	1.87	4.27	5.31	8.50

***DO NOT** use Table 01 to manufacture wall frames using mixed species of Baltic Pine and Radiata Pine. Table 03 in Appendix A should be used instead for this purpose.

DESIGN CAPACITY FOR FIXING TOP PLATE DIRECTLY TO LINTEL AND BOTTOM PLATE TO JOIST

Table 02

Uplift Capacity of Top Plate to Lintel and Bottom Plate to Floor Joist Fixings					
Timber Species/ Joint Group	Wall Plate Thickness (mm)	Limit State Design Wind Uplift Capacity (kN) per Stud-Lok			
		SL125	SL170	SLX165	SLX210
Australian & New Zealand grown pine / JD4	35	7.13	7.13	10.30	-
	45	7.13	7.13	10.30	-
	70	6.63	7.13	10.30	12.10
	80	5.42	7.13	9.28	12.10
	90	4.22	7.13	8.70	12.10
Australian & New Zealand grown pine / JD5	35	5.74	5.74	9.10	-
	45	5.74	5.74	9.10	-
	70	5.33	5.74	9.10	9.10
	80	4.36	5.74	8.71	9.10
	90	3.39	5.74	7.69	9.10
Imported White Baltic Pine & European Spruce / JD6	35	4.27	4.27	6.50	-
	45	4.27	4.27	6.50	-
	70	3.97	4.27	6.50	8.50
	80	3.25	4.27	6.22	8.50
	90	2.52	4.27	5.49	8.50

NOTES

1. The design capacities have been obtained and certified through laboratory testing – refer to MiTek Test Report No. 150405 and 150484.

   The uplift design capacities of framing nails in the Table 9.19(a) of AS 1684.2 and AS 1684.3 may be added to the Stud-Lok design capacities tabulated in Table 01 and Table 02. The design capacities of glue-coated or deformed shank pneumatically driven nails with minimum 40mm penetration into stud are shown below.

Timber Species / Joint Group	Limit State Uplift Design Capacity (kN) for pneumatically driven nails	
	Number/Nail diameter (mm)	
	2/ø3.05	2/ø3.33
JD4	0.26	0.33
JD5	0.17	0.20
JD6	0.12	0.14

2. Design capacities in the tables incorporate the capacity factor (ø) for Category 1 structural joints. For other categories, multiply the design capacities by 0.94 for Category 2 and 0.88 for Category 3. Refer to AS 1720.1 for a full definition of each category

3. Values in Table 01 and Table 02 may be used with LVL or EWP studs and wall plates connection provided the user chooses correct joint group specification in side face, edge and end grain as provided by LVL manufacturer.

4. Splitting of LVLs and EWPs has been observed during application of Stud-Lok especially for LVLs with Joint Group higher than JD4. Use 4mm pre-drilled pilot holes, if required, for high density materials (density higher than 475 kg/m^3). If Stud-Lok has already been installed and splitting has already occured, do not remove StudLok. Reinforce the stud - wall plate connection at split with MiTek PlateTie or StudStrap.

5. Do not use compressed airlines to install StudLok screws. Continuous drive is needed to achieve nominataed capacities. Use of Impact Drivers with radial hammer action is acceptable to achieve continuous drive of StudLok

STUD-LOK FIXING - STANDARD WALLS

Available for
SL125, SL170 SLX165 & SLX210

Stud-Lok SL125	Stud-Lok SL170	Stud-Lok SLX165	Stud-Lok SLX210

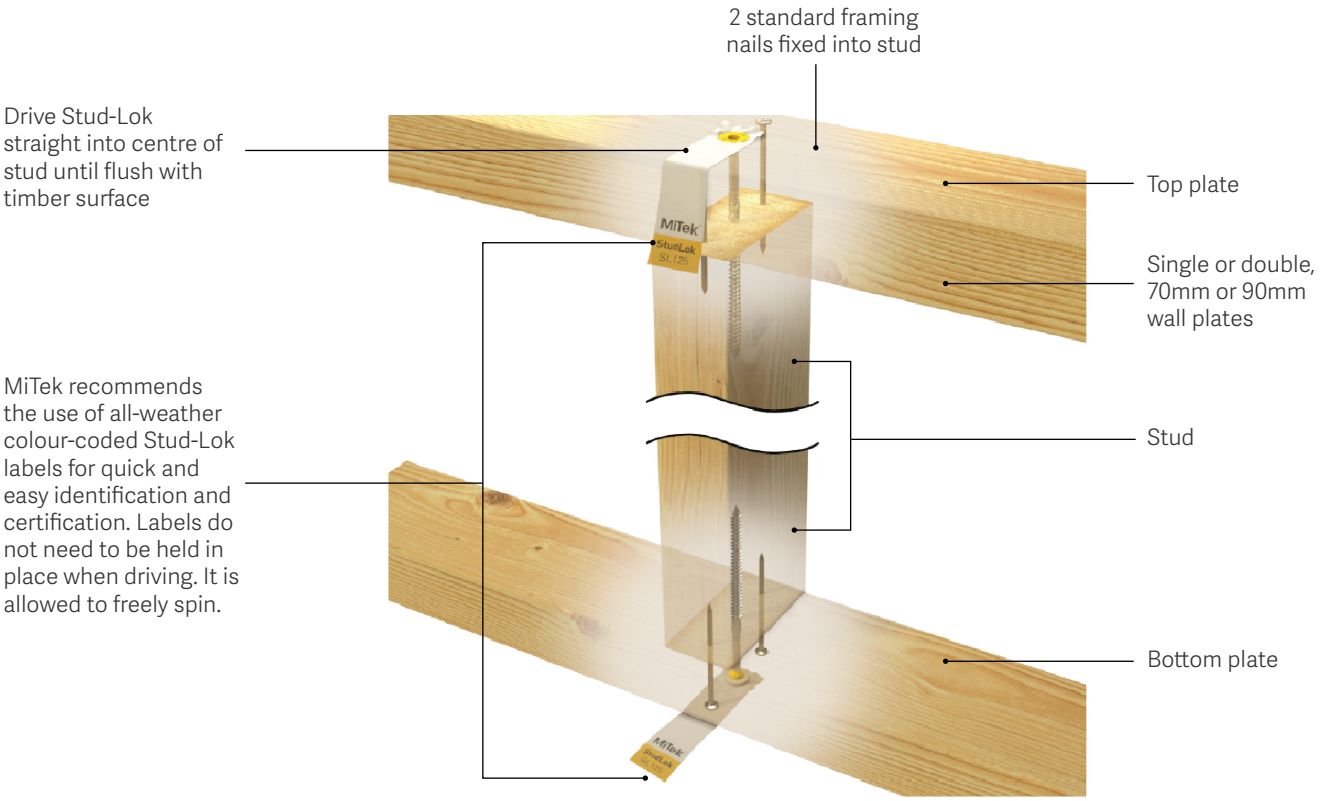

RAKING WALLS

Drive Stud-Lok through the top plate into the centre of the stud. Ensure Stud-Lok is flush.

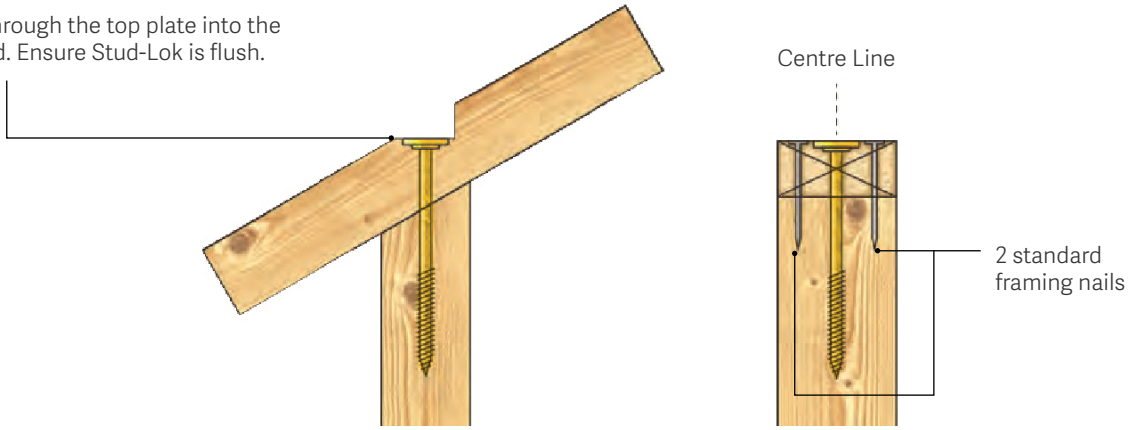

FIXING TOP PLATE TO STUD

Fix ribbon plate to lower top plate in accordance with Clause 2.5 and 9.2.8 in AS 1684.2 and AS 1684.3.

Fix rafter/ truss tie-down directly to lower top plate, lintel and/or stud with long and deep connectors such as CycloneTies, when SL170 or SLX210 is not used to fix the ribbon plate to stud.

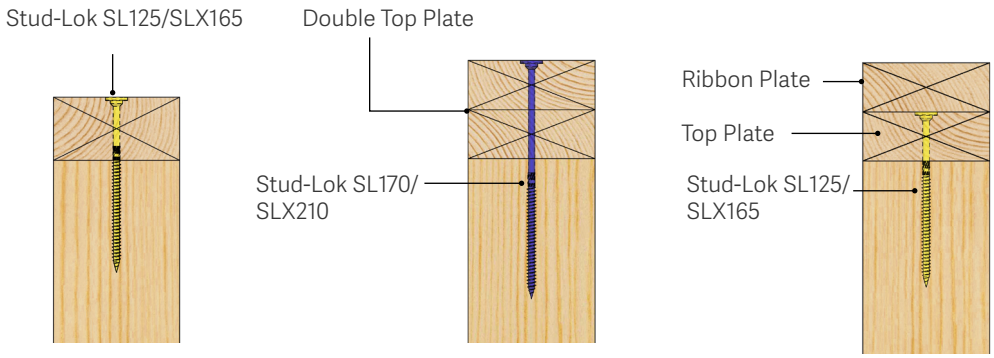

Fix single Top Plate to Stud with Stud-Lok SL125/SLX165

Fix double Top Plates to Stud with Stud-Lok SL170/SLX210 (recommended)

Fix lower Top Plate to Stud with Stud-Lok SL125/ SLX165 if Ribbon Plate is not required for Truss Tie-Down fixing (optional)

STUD AT END WALL & MULTIPLE STUD FIXINGS

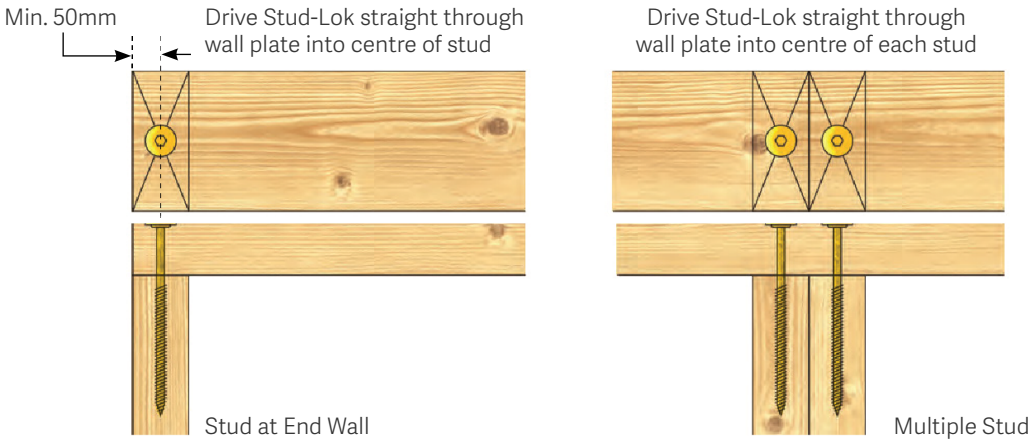

NOTES

Where 50mm end distance to the end of the top plate is not possible - fix in accordance with End Connection A or B.

END CONNECTION A

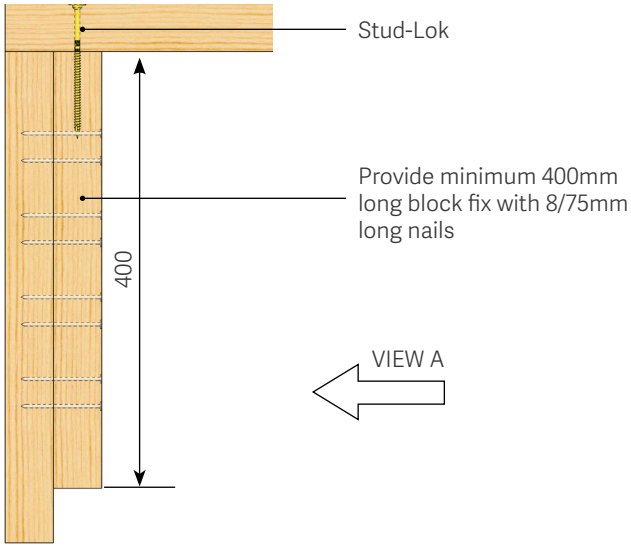

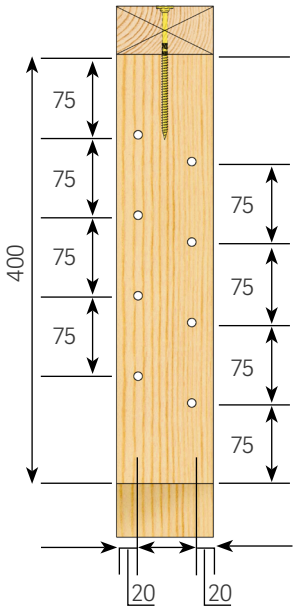

View - A (Typical)

END CONNECTION B

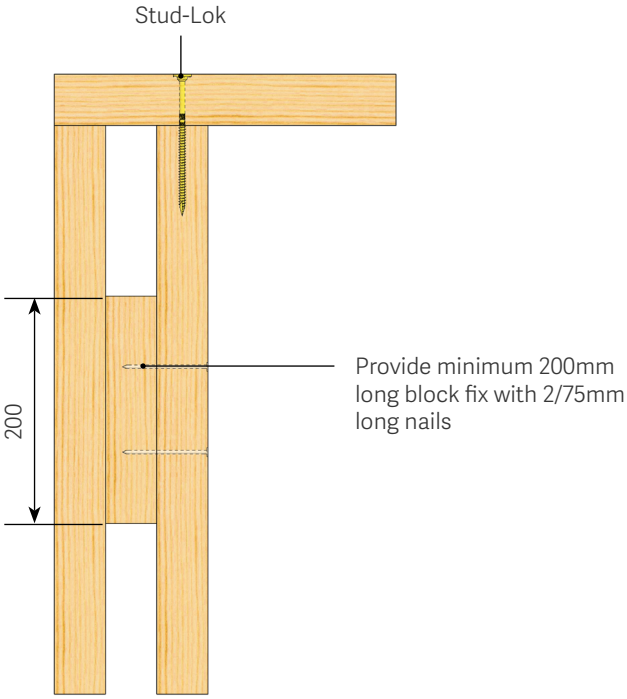

FIXING BOTTOM PLATE TO JOIST

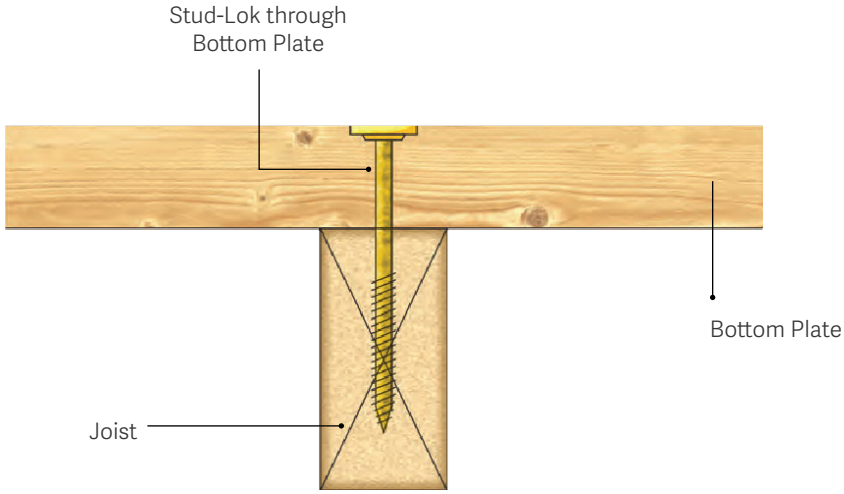

TOP PLATE TO LINTEL CONNECTIONS

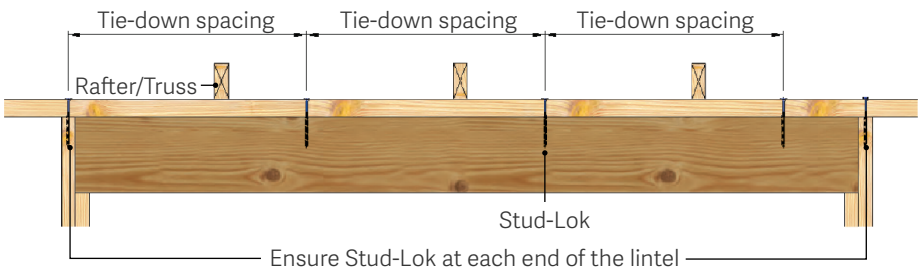

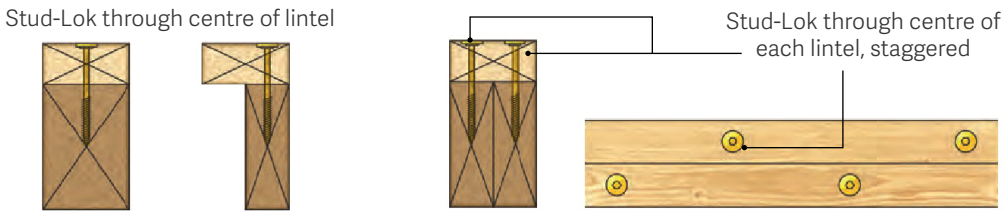

Solid Lintel

Double Lintel

NOTES

1. Fix Stud-Lok through the top plate to lintel at the design tie-down spacing for the required wind uplift capacity listed in Table 02.
2. Tie-down of rafter/truss to top plate as per Roof Layout Plan
3. All girder trusses are directly tied down to the lintel.
4. The top plate size and grade can be determined from AS 1684 Span Tables for the tie-down spacingnominated in (1) above.

STRUCTURAL WALL BRACING PLATE TO STUD CONNECTIONS

Stud-Lok can be used in lieu of metal straps as required in AS1684.2 & 3, Table 8.18 and AS1684.4 Table 8.3. Refer to MiTek's Wall Plate to Stud Connections Reference Chart for details.

APPENDIX A - WALL PLATE TO STUD CONNECTIONS WITH BALTIC/RADIATA PINE COMBINATIONS

The design capacities in Table 03 are for wall plate to stud connections with Baltic Pine and Radiata Pine combinations. They are based on minimum air-dry densities for seasoned timbers of 450 kg/m3 for Baltic Pine MGP10, 500 kg/m3 for Radiata Pine MGP10, 540 kg/m3 for Radiata and Baltic Pine MGP12.

Table 03

Uplift Capacity for connection of mixed timber species					
Timber Species/Joint Group	Wall Plate Thickness (mm)	Limit State Design Wind Uplift Capacity (kN) per Stud-Lok			
		SL125	SL170	SLX165	SLX210
Plate: Radiata MGP12 Stud: Radiata MGP12	35	7.13	7.13	10.30	-
	45	7.13	7.13	10.30	-
	70	4.90	7.13	9.58	12.10
	80	4.01	7.13	8.57	12.10
	90	3.12	7.13	7.56	12.10
Plate: Radiata MGP12 Stud: Baltic MGP12	35	5.74	5.74	9.10	-
	45	5.74	5.74	9.10	-
	70	3.94	5.74	7.20	9.10
	80	3.23	5.74	6.45	9.10
	90	2.51	5.74	5.69	9.10
Plate: Radiata MGP10 Stud: Radiata MGP10	35	5.74	5.74	9.10	-
	45	5.74	5.74	9.10	-
	70	3.94	5.74	7.20	9.10
	80	3.23	5.74	6.45	9.10
	90	2.51	5.74	5.69	9.10
Plate: Radiata MGP10 Stud: Baltic MGP10	35	4.27	4.27	8.50	-
	45	4.27	4.27	8.50	-
	70	2.94	4.27	6.73	8.50
	80	2.40	4.27	6.02	8.50
	90	1.87	4.27	5.31	8.50
Plate: Baltic MGP10 Stud: Baltic MGP10	35	4.27	4.27	6.50	-
	45	4.27	4.27	6.50	-
	70	2.94	4.27	6.50	8.50
	80	2.40	4.27	6.02	8.50
	90	1.87	4.27	5.31	8.50

NOTES

Design capacities in the tables incorporate the capcity factor (ø) for Category 1 structural joints. For other categories, multiply the design capacities by 0.94 for Category 2 and 0.88 for Category 3. Refer to AS 1720.1 for full definition of each category.

MITEK
EASYCAT available datasheet any time anywhere!
FREE Download
Download on the Mac App Store
GET IT ON Google Play